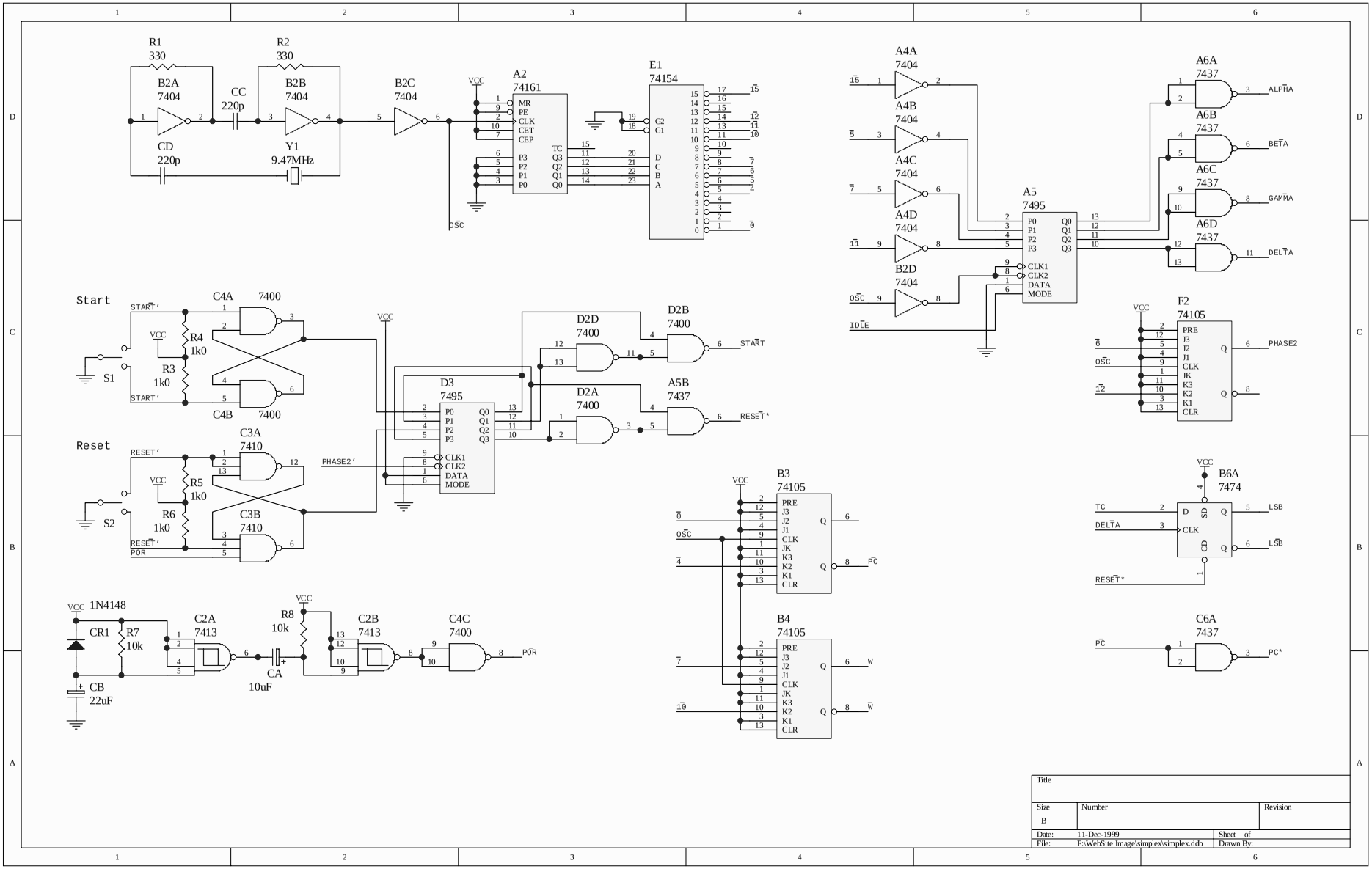
R1
330
R2
330
B2A
7404
CC
220p
B2B
7404
B2C
7404
CD
220p
Y1
9.47MHz
VCC
A2
74161
MR
PE
CLK
CET
CEP
P3
P2
P1
P0
TC
Q3
Q2
Q1
Q0
E1
74154
G2
G1
D
C
B
A
A4A
7404
A4B
7404
A4C
7404
A4D
7404
B2D
7404
A5
7495
P0
P1
P2
P3
Q0
Q1
Q2
Q3
CLK1
CLK2
DATA
MODE
A6A
7437
A6B
7437
A6C
7437
A6D
7437
ALPHA
BETA
GAMMA
DELTA
Start
START'
C4A
7400
R4
1k0
R3
1k0
S1
C4B
7400
Reset
RESET'
C3A
7410
R5
1k0
R6
1k0
S2
C3B
7410
POR
PHASE2'
D3
7495
D2D
7400
D2B
7400
D2A
7400
A5B
7437
RESET*
F2
74105
PRE
J3
J2
J1
CLK
JK
K3
K2
K1
CLR
Q
PHASE2
B3
74105
B4
74105
B6A
7474
D
SD
CLK
CD
LSB
C6A
7437
PC*
1N4148
CR1
R7
10k
CB
22uF
C2A
7413
R8
10k
CA
10uF
C2B
7413
C4C
7400
Title
Size
B
Number
Revision
Date:
11-Dec-1999
Sheet of
File:
F:\WebSite Image\simplex\simplex.ddb
Drawn By: